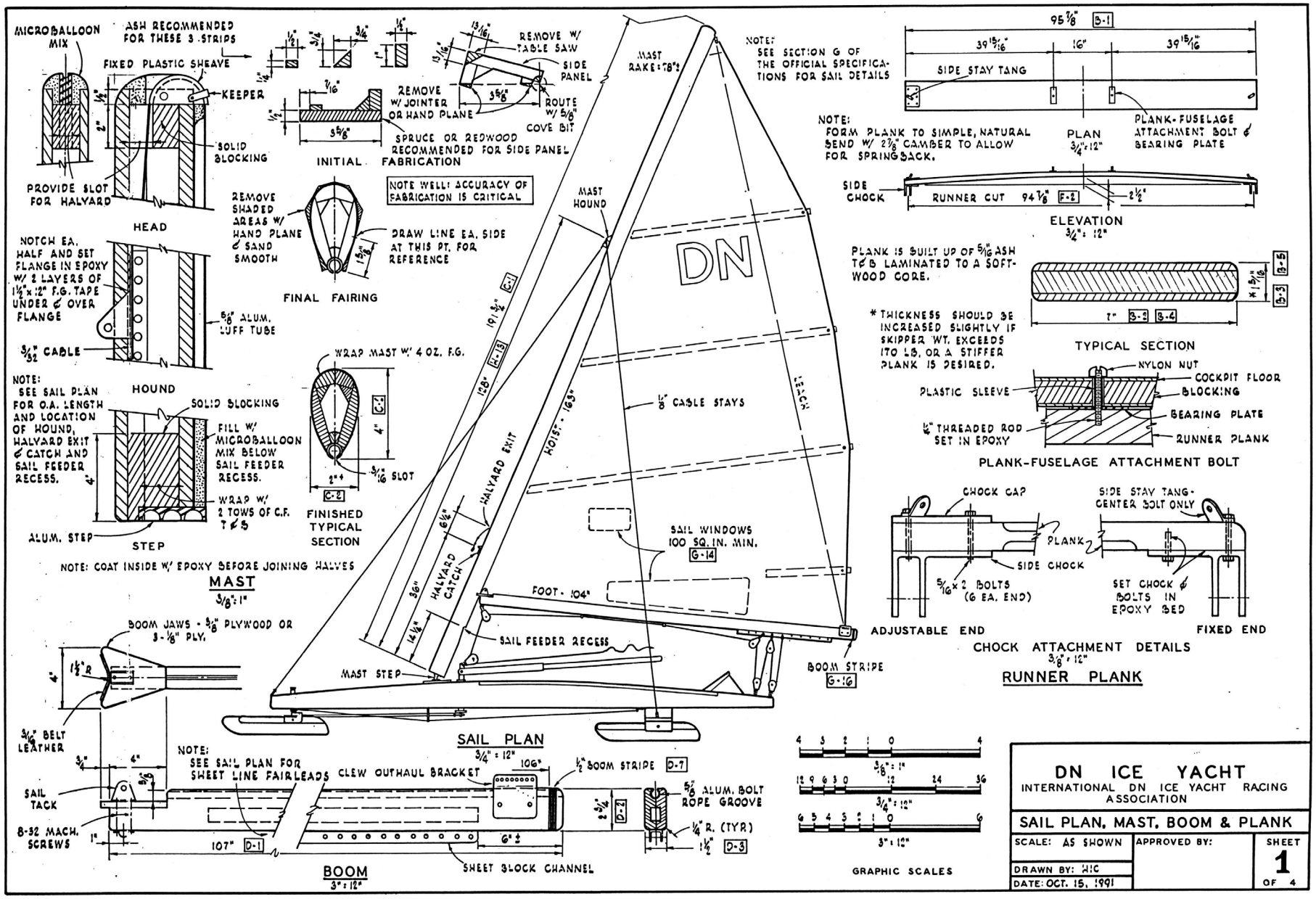

DN ICE YACHT

INTERNATIONAL DN ICE YACHT RACING ASSOCIATION

SAIL PLAN, MAST, BOOM & PLANK

SCALE: AS SHOWN	APPROVED BY:	SHEET 1 OF 4
DRAWN BY: HIC		
DATE: OCT. 15, 1991		

STATION NUMBER	½ WIDTH TO ℄ *
0	1"
1	2"
2	3"
3	4"
4	5"
5	6"
6	7"
7	8"
8	9"
9	10"
10	10⅛"
11	6½"
12	⅞"

DISTANCE FROM BOW**	# TOP ABOVE ZERO LINE
2"	2 9/16"
12"	4⅛"
24"	5 7/16"
36"	6⅜"
48"	7"
60"	7¼"
72"	7 5/16"
84"	7⅛"
96"	6¾"
108"	6⅛"
120"	5 3/16"
132"	3⅛"
***	2¼"

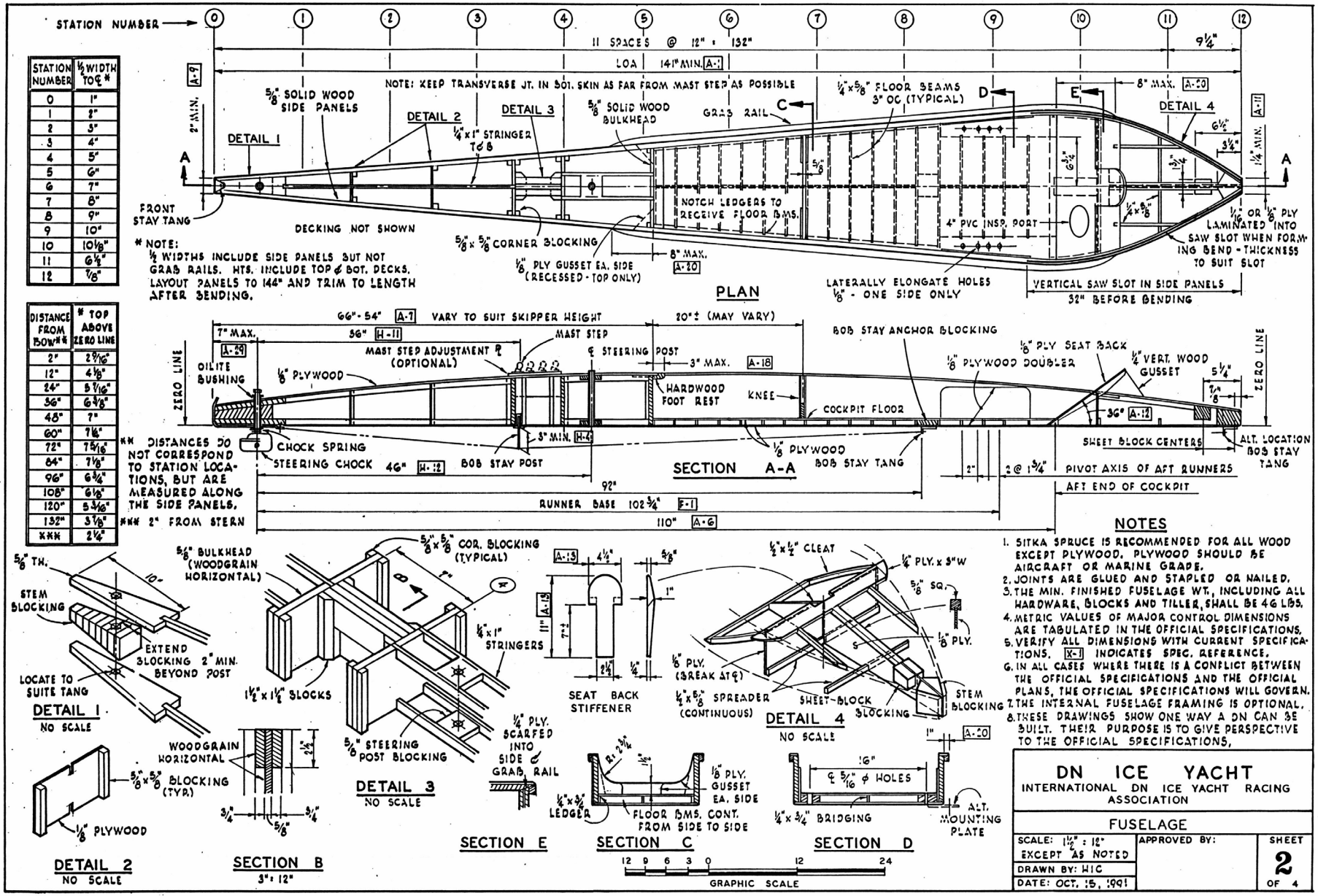

NOTES

1. SITKA SPRUCE IS RECOMMENDED FOR ALL WOOD EXCEPT PLYWOOD. PLYWOOD SHOULD BE AIRCRAFT OR MARINE GRADE.
2. JOINTS ARE GLUED AND STAPLED OR NAILED.
3. THE MIN. FINISHED FUSELAGE WT., INCLUDING ALL HARDWARE, BLOCKS AND TILLER, SHALL BE 46 LBS.
4. METRIC VALUES OF MAJOR CONTROL DIMENSIONS ARE TABULATED IN THE OFFICIAL SPECIFICATIONS.
5. VERIFY ALL DIMENSIONS WITH CURRENT SPECIFICATIONS. X-1 INDICATES SPEC. REFERENCE.
6. IN ALL CASES WHERE THERE IS A CONFLICT BETWEEN THE OFFICIAL SPECIFICATIONS AND THE OFFICIAL PLANS, THE OFFICIAL SPECIFICATIONS WILL GOVERN.
7. THE INTERNAL FUSELAGE FRAMING IS OPTIONAL.
8. THESE DRAWINGS SHOW ONE WAY A DN CAN BE BUILT. THEIR PURPOSE IS TO GIVE PERSPECTIVE TO THE OFFICIAL SPECIFICATIONS.

DN ICE YACHT

INTERNATIONAL DN ICE YACHT RACING ASSOCIATION

FUSELAGE

SCALE: 1½" = 12" EXCEPT AS NOTED	APPROVED BY:	SHEET 2 OF 4
DRAWN BY: WIC		
DATE: OCT. 15, 1991		

DIMENSIONAL TOLERANCES

SPEC. REF.	ITEM	MAX.	MIN.
	FUSELAGE		
A-1	LENGTH OVERALL	147	141
A-2	BEAM	21½	17½
A-3	DECK & FLOOR TH.	¼	0.118
A-4	BOTTOM TH.	¼	0.118
A-5	SIDES & BULKHEADS	1	⅝
A-6	RE: SH. 2 OF 4	110¼	98¼
A-7	RE: SH. 2 OF 4	66	54
A-9	STEM WIDTH (BOW)	3¾	2
A-11	STEM WIDTH (STERN)	4	1¼
A-12	SEAT BACK ANGLE	55°	35°
A-15	SEAT BACK LENGTH	*	11
	SEAT BACK WIDTH	*	4
	SEAT BACK RAD. (TOP)	*	2
A-18	DECK PROTRUSION	3	0
A-20	GRAB RAIL LIMITS	8	*
A-22	TILLER WIDTH	8	*
A-29	RE: SH. 2 OF 4	7	3
	* NO RESTRICTION		
	RUNNER PLANK		
B-1	LENGTH OVERALL	96	94
B-2	WIDTH AT ℄	7½	6¼
B-3	THICKNESS AT ℄	1⅝	1⅛
B-4	WIDTH AT ENDS	7¼	5½
B-5	THICKNESS AT ENDS	1⅝	1
	MAST		
C-1	LENGTH OVERALL	192	188
C-2	WOOD CONSTRUCTION:		
a	FORE & AFT WIDTH	4	-
b	BOOM TO HOUND	-	3½
c	ABOVE THE HOUND	-	2
d	THICKNESS	2½	-
e	STEP TO HOUND	-	2
f	ABOVE THE HOUND	-	1⅛
g	TH. OF OUTSIDE WALL	2½	¼
	BOOM		
D-1	LENGTH FROM MAST	108	-
D-2	DEPTH	3	2½
D-3	THICKNESS	1 25/32	1¼
	RUNNER BASE & CUT		
F-1	RUNNER BASE	103	97
F-2	RUNNER CUT	95	-

NOTES

1. ALL DIMENSIONS ARE IN INCHES EXCEPT AS NOTED.
2. REFER TO CURRENT SPECS. FOR ADDITIONAL REQUIRMENTS, ITEMS NOT LISTED AND METHODS OF MEASUREMENT.

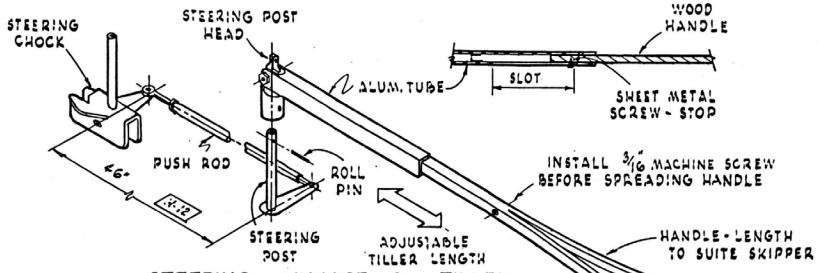

STEERING LINKAGE & TILLER

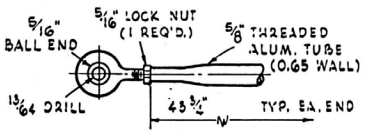

PUSH ROD

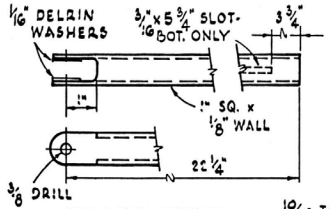

TILLER TUBE

ALUM.

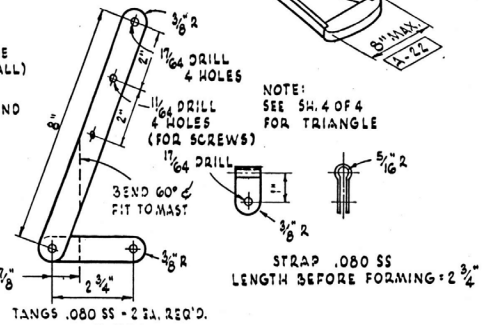

EXTERNAL MAST HOUND

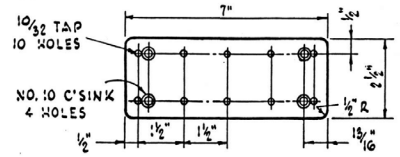

MAST STEP ADJUSTMENT PLATE

1/4" ALUM. (OPTIONAL)

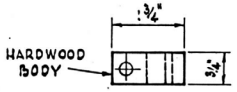

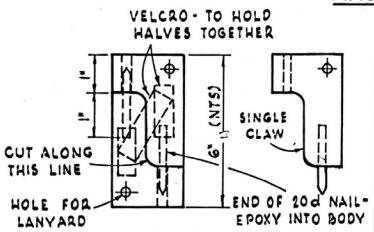

ICE CLAW

THIS ITEM IS NOT PART OF THE DN ICE YACHT, BUT IS INCLUDED HERE AS AN ITEM OF PERSONAL EQUIPMENT TO BE CARRIED ON THE ICE AT ALL TIMES.

BILL OF MATERIALS*

NO. PCS.	SIZE	MATERIAL	FOR
2	½" x 5⅝" x 16'-0"	SPRUCE/REDWOOD	MAST
1	1" x 6" x 16'-0"	ASH/BIRCH	MAST
2	½" x 8" x 8'-0"	ASH	PLANK
1	5/16" x 8" x 8'-0"	SPRUCE/REDWOOD	PLANK
2	5/8" x 8" x 12'-0"	SPRUCE	FUSELAGE SIDES
1	5/8 x 8 x 8'-0"	SPRUCE	BULKHEADS, ETC.
1	⅛ x 4'-0" x 8'-0"	MARINE PLY.	DECKS, SKIN, SOLE
2	¾ x 3 x 8'-0"	SPRUCE	BOOM
1	1 x 5 x 9'-0"	HARDWOOD PLY.	RUNNERS

* WOOD ONLY

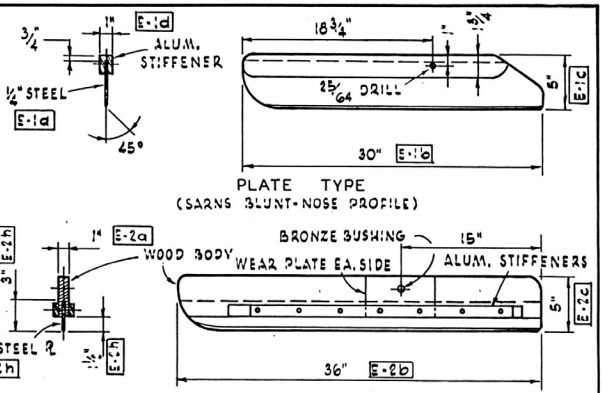

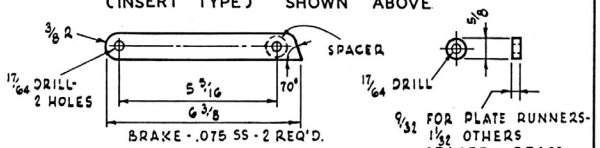

NOTE: ALL STEERING RUNNERS MUST BE EQUIPPED W/ A BRAKE.
PARKING BRAKE

RUNNER DETAILS

DN ICE YACHT

INTERNATIONAL DN ICE YACHT RACING ASSOCIATION

MISCELLANEOUS DETAILS

SCALE: NONE	APPROVED BY	SHEET
DRAWN BY: HIC		3
DATE: OCT. 15, 1991		OF 4

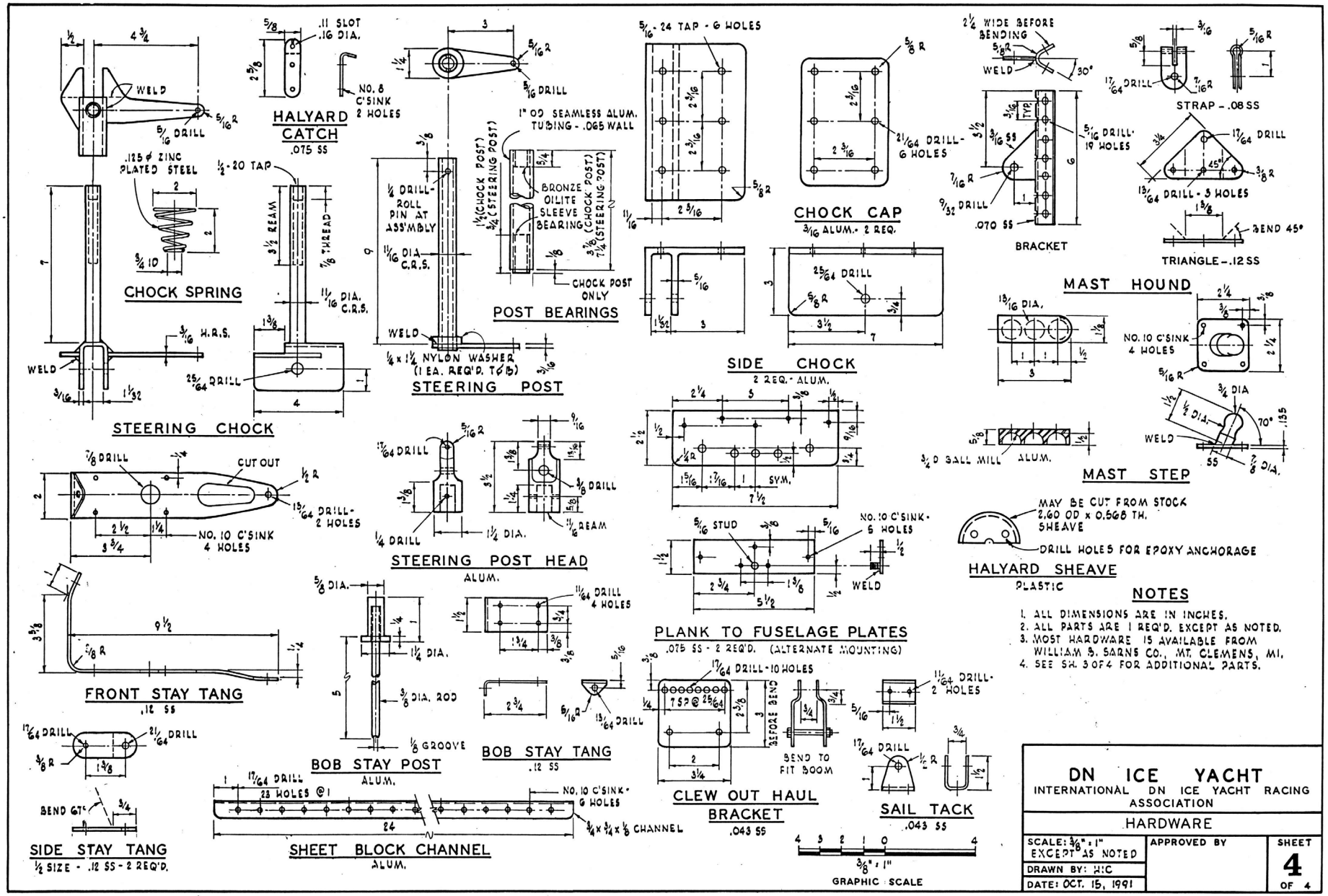

NOTES

1. ALL DIMENSIONS ARE IN INCHES.
2. ALL PARTS ARE 1 REQ'D. EXCEPT AS NOTED.
3. MOST HARDWARE IS AVAILABLE FROM WILLIAM B. SARNS CO., MT. CLEMENS, MI.
4. SEE SH. 3 OF 4 FOR ADDITIONAL PARTS.

DN ICE YACHT

INTERNATIONAL DN ICE YACHT RACING ASSOCIATION

HARDWARE

SCALE: 3/8" = 1" EXCEPT AS NOTED	APPROVED BY	SHEET 4 OF 4
DRAWN BY: HIC		
DATE: OCT. 15, 1991		